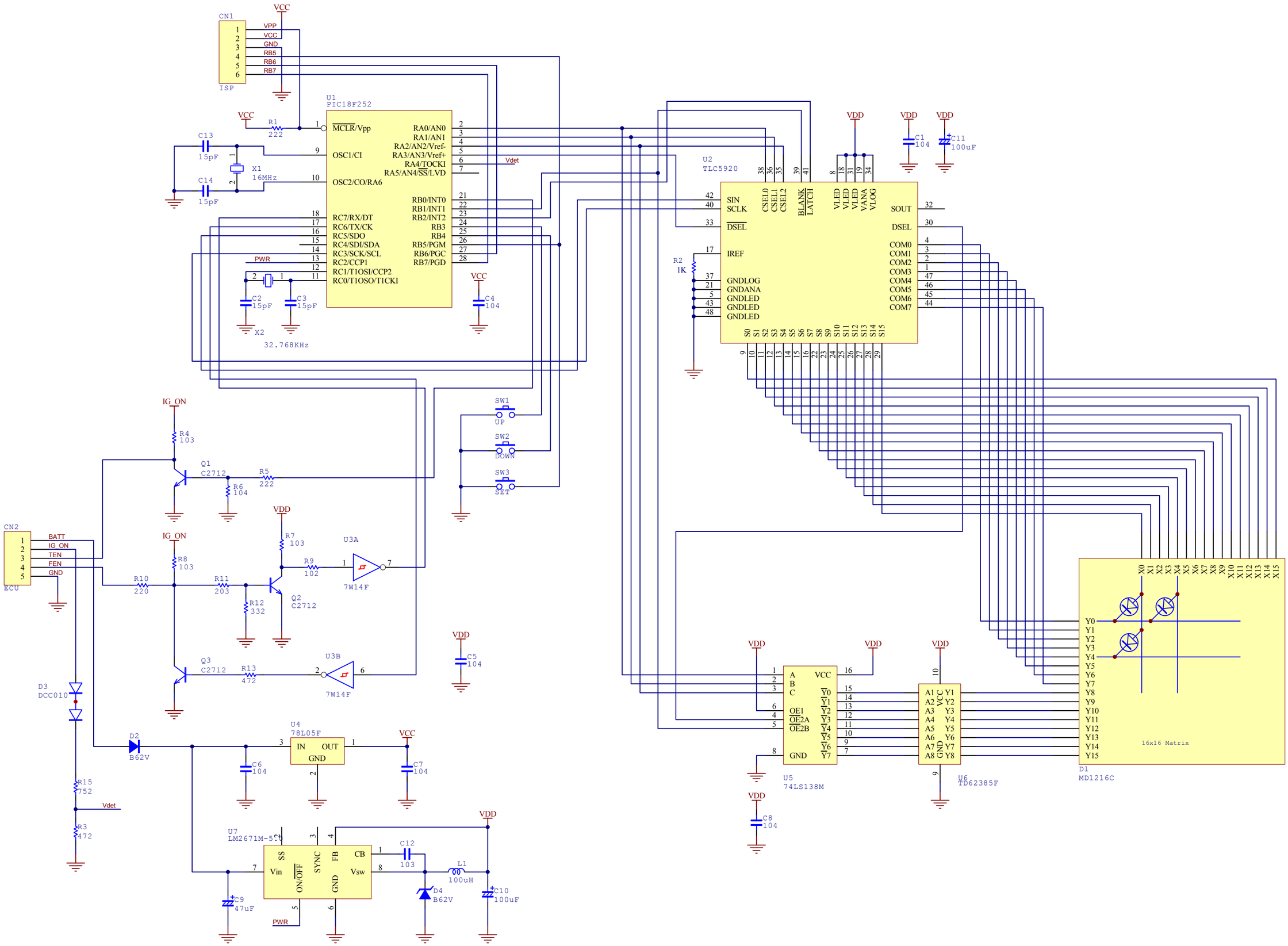
CN1
ISP
VPP
VCC
GND
RB5
RB6
RB7
U1
PIC18F252
MCLR/Vpp
OSC1/CI
OSC2/CO/RA6
RA0/AN0
RA1/AN1
RA2/AN2/Vref-
RA3/AN3/Vref+
RA4/TOCKI
RA5/AN4/SS/LVD
RB0/INT0
RB1/INT1
RB2/INT2
RB3
RB4
RB5/PGM
RB6/PGC
RB7/PGD
RC7/RX/DT
RC6/TX/CK
RC5/SDO
RC4/SDI/SDA
RC3/SCK/SCL
RC2/CCP1
RC1/T1OSI/CCP2
RC0/T1OSO/T1CKI
R1
222
C13
15pF
C14
15pF
X1
16MHz
PWR
C2
15pF
C3
15pF
X2
32.768KHz
C4
104
Vdet
U2
TLC5920
SIN
SCLK
DSEL
IREF
GNDLOG
GNDANA
GNDLED
GNDLED
GNDLED
CSEL0
CSEL1
CSEL2
BLANK
LATCH
VLED
VLED
VLED
VANA
VLOG
SOUT
DSEL
COM0
COM1
COM2
COM3
COM4
COM5
COM6
COM7
R2
1K
C1
104
C11
100uF
SW1
UP
SW2
DOWN
SW3
SET
IG_ON
R4
103
Q1
C2712
R5
222
R6
104
CN2
ECU
BATT
IG_ON
TEN
FEN
GND
R8
103
R7
103
U3A
7W14F
R9
102
R10
220
R11
203
R12
332
Q2
C2712
Q3
C2712
R13
472
U3B
7W14F
C5
104
D3
DCC010
D2
B62V
U4
78L05F
IN
OUT
GND
C6
104
C7
104
R15
752
R3
472
U7
LM2671M-5.0
Vin
ON/OFF
SS
SYNC
FB
GND
CB
Vsw
C12
103
L1
100uH
D4
B62V
C10
100uF
C9
47uF
U5
74LS138M
U6
TD62385F
D1
MD1216C
16x16 Matrix
C8
104