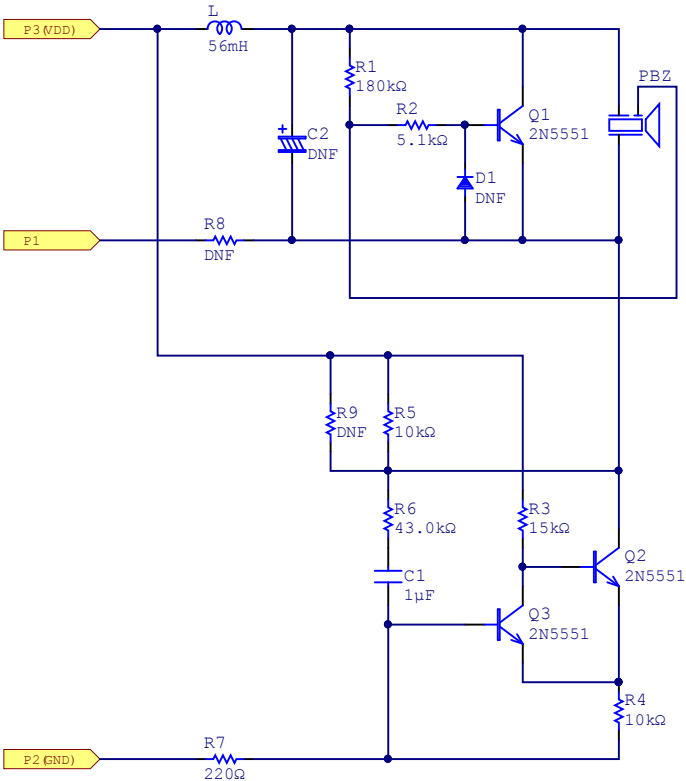
P3 (VDD)
L
56mH
R1
180kΩ
R2
5.1kΩ
C2
DNF
Q1
2N5551
PBZ
D1
DNF
P1
R8
DNF
R9
DNF
R5
10kΩ
R6
43.0kΩ
R3
15kΩ
C1
1µF
Q2
2N5551
Q3
2N5551
R4
10kΩ
P2 (GND)
R7
220Ω

PB10-Z338R