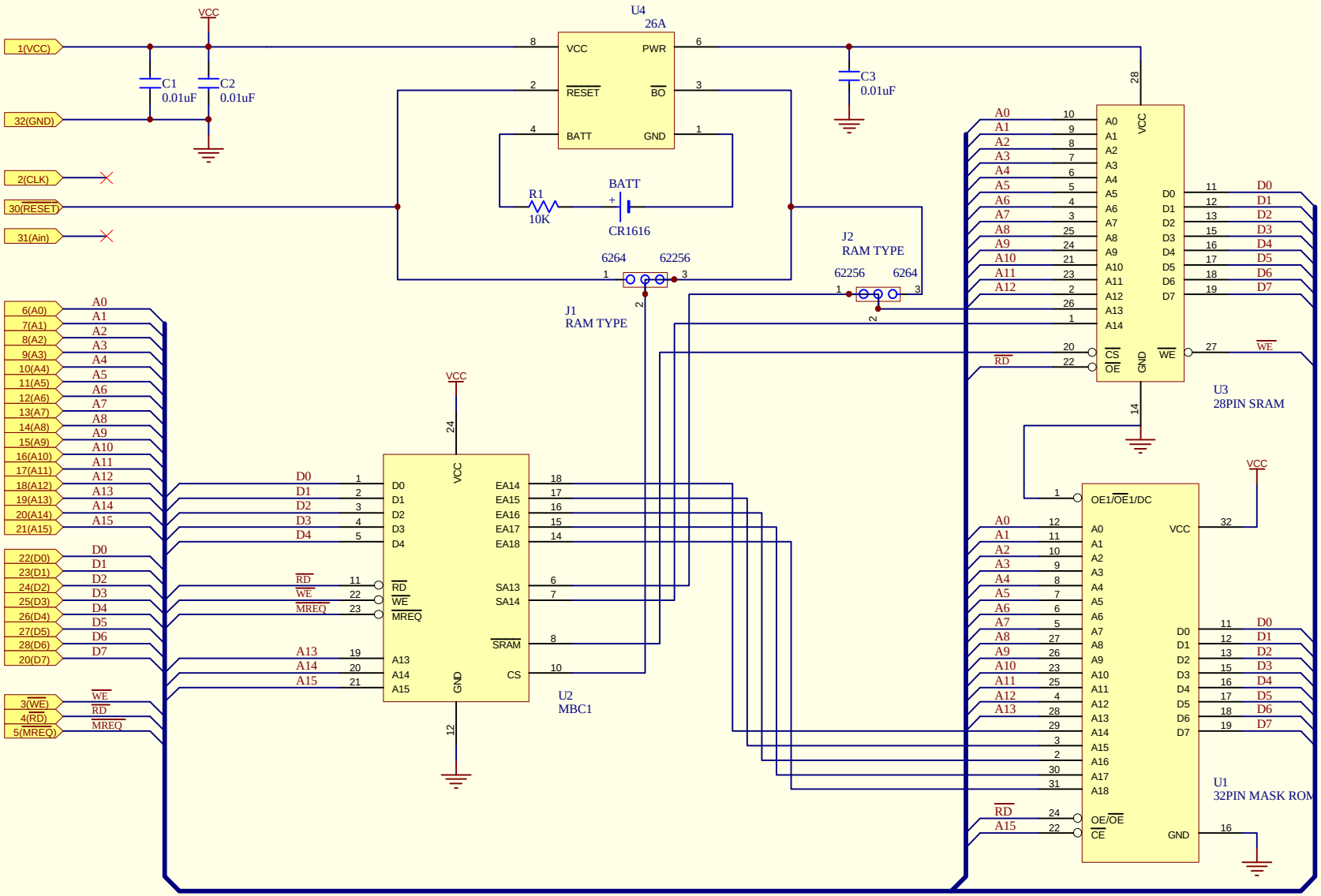


| Title | | | Designed by H.Kashima |
|---|---|---|---|
| *MBC1 type GB Cartridges* | | | TSUKUBA City, IBARAKI 305 JAPAN |
| Size: A4 | Number: | Revision: | |
| File: R:\GBR2\MBC1TYPE.SCH | Date: 11-May-1998 Time: 23:36:24 | Sheet 0 of 0 | Kashi Electronic Designs |