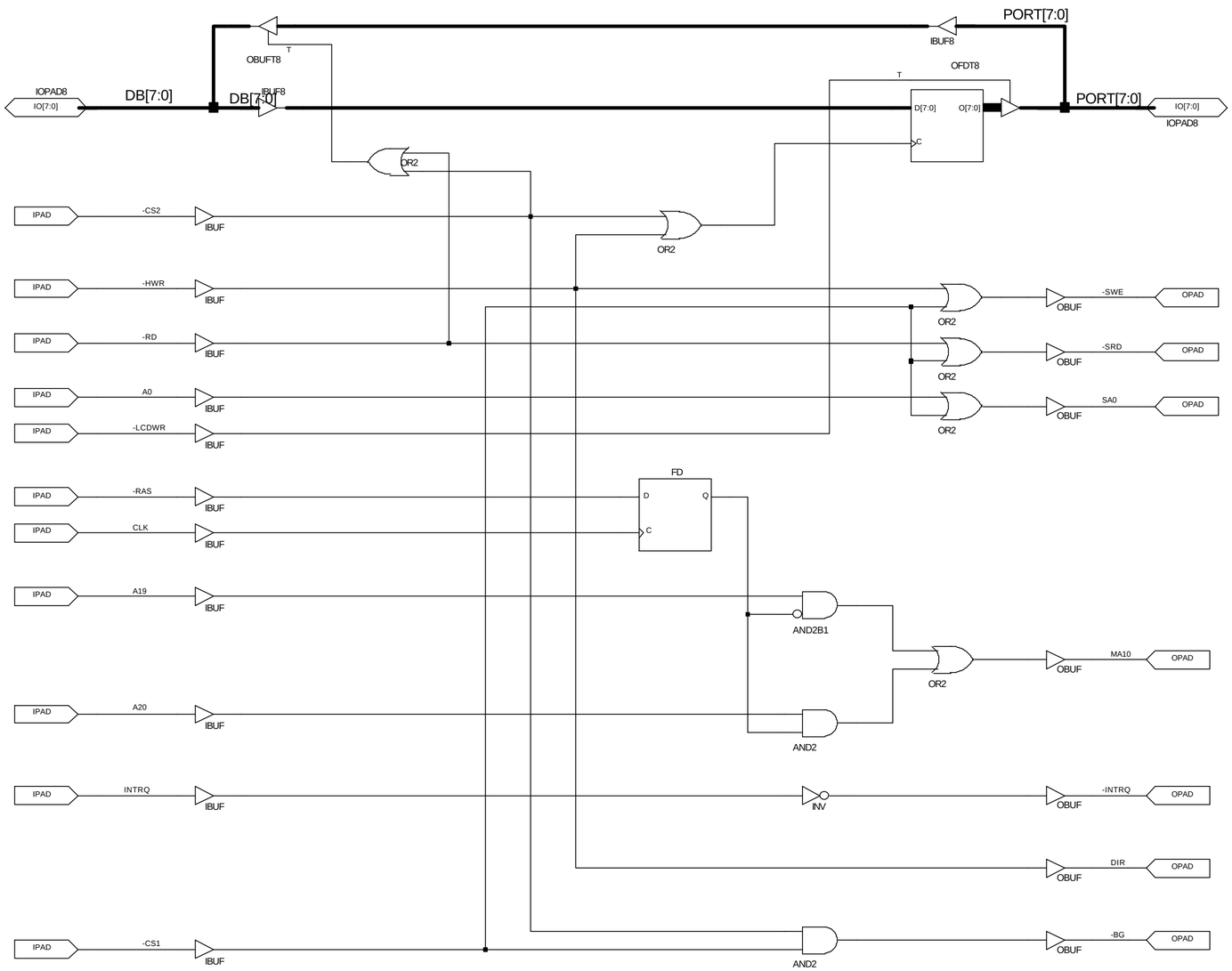

Xilinx Corporation	Project: MPCDPRF
2100 Logic Drive	Sheet: MPCDPRF1
San Jose, CA 95124	Date: 03/09/99