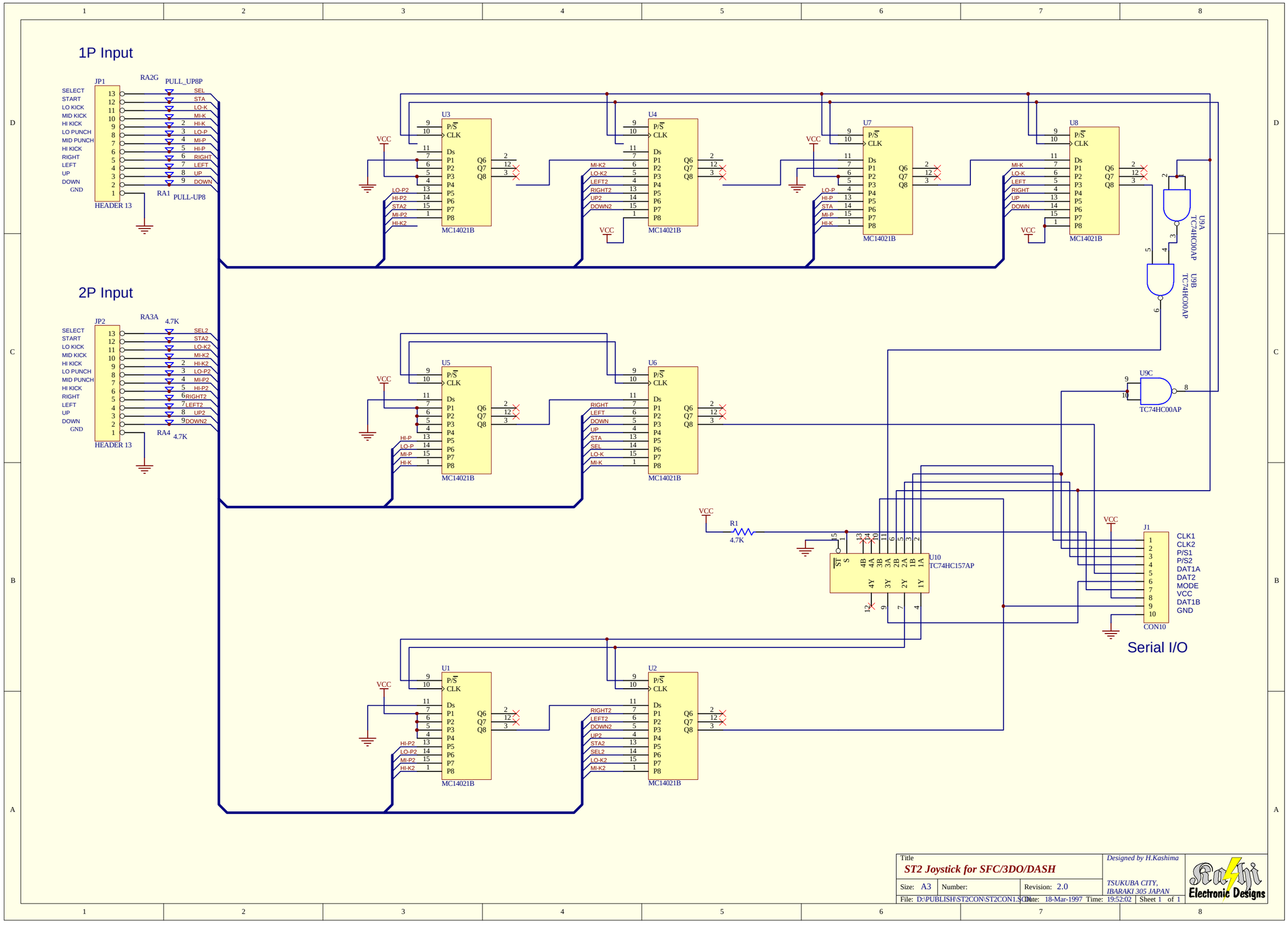
1P Input
2P Input
Serial I/O
JP1
JP2
HEADER 13
RA2G
RA1
RA3A
RA4
PULL_UP8P
PULL-UP8
4.7K
SELECT
START
LO KICK
MID KICK
HI KICK
LO PUNCH
MID PUNCH
HI KICK
RIGHT
LEFT
UP
DOWN
GND
U1
U2
U3
U4
U5
U6
U7
U8
MC14021B
U9A
U9B
U9C
TC74HC00AP
U10
TC74HC157AP
R1
J1
CON10
CLK1
CLK2
P/S1
P/S2
DAT1A
DAT2
MODE
VCC
DAT1B
GND
Title
ST2 Joystick for SFC/3DO/DASH
Size: A3
Number:
Revision: 2.0
Designed by H.Kashima
TSUKUBA CITY,
IBARAKI 305 JAPAN
Date: 18-Mar-1997
Time: 19:52:02
Sheet 1 of 1
Electronic Designs